ENGINE, AIR INTAKE MANIFOLD - Z26S4D92AN/AH/BN/BH (C750267)

2026 RZR - RZR PRO S4 ULTIMATE (R01) - Z26S4D92AN/AH/BN/BH

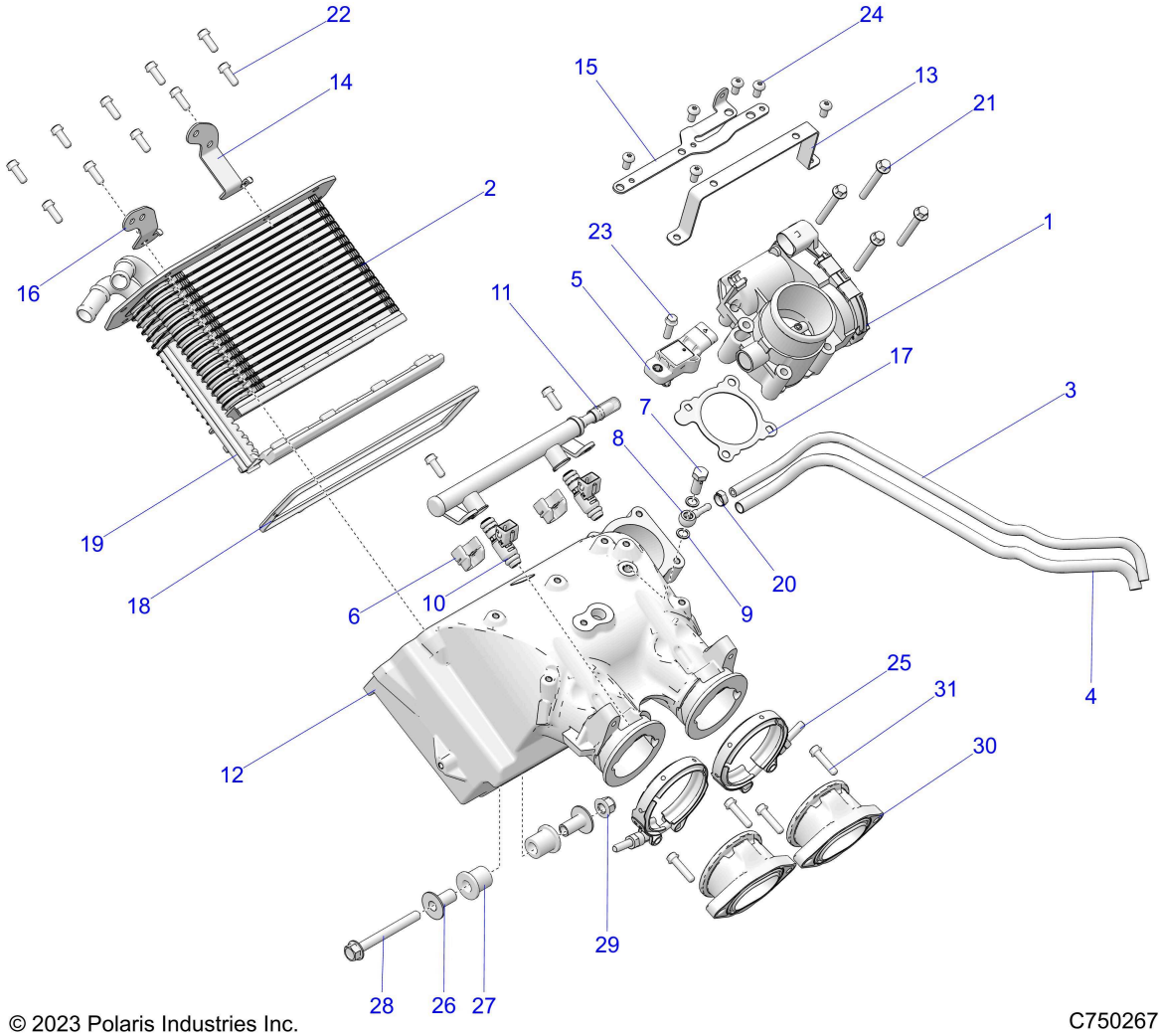

© 2023 Polaris Industries Inc.

C750267

Reference #	*Part#*	*Description*	*Quantity*
1	1204455	THROTTLE-ETC,46MM	1
2	1240930	CORE-LCAC	1
3	1241347	ASM-HOSE REFERENCE,48CM [INCL. 4]	1
3	8450153-48	LINE-BOOST,3/16 ID,25CM	1
4	5522158-45	WRAP-FLEXFIT 2115,8MM,45CM	1
5	2413095	SENSOR-TMAP,3BAR	1
6	2521515	CLIP-INJECTOR,MM	2
7	2521519	BOLT-BANJO,M8X1	1
8	2521520	FITTING-BANJO,M8	1
9	2521527	WASHER-M8,AL	2
10	2521914	INJECTOR-FUEL,570G,3.8BAR	2
10	5417103	O-RING,INJECTOR	4
11	2522004	ASM-RAIL,FUEL,4BAR,NR	1
12	5142566	MANIFOLD-MACH,VBAND	1
13	5260975-329	BRKT-MNT,INJECTOR HARNESS,BLK	1
14	5261651-329	BRKT-MOUNT,FUEL LINE,BLK	1
15	5262111	BRACKET, HARNESS	1
16	5267922	BRKT-SENSOR,LAMBDA	1

17	5813735	GASKET-ETC	1
18	5814277	SEAL-LCAC,TOP	1
19	5814884	SEAL-LCAC,LOWER	1
20	7082109	CLAMP-OETIKER,16700005-10.0	2
21	7517932	SCR-M6X1.0X50.0 HX/FL-Y/D	4
22	7518548	SCREW-HXFL-M6X1.0X16 8.8 ZY3	12
23	7518576	SCREW-HXFL-M6X1.0X20 8.8 ZY3	1
24	7519063	SCREW-TXBH-M6X1.0X12 8.8 ZPB D20	6
25	3022888	CLAMP-VBAND,INTAKE	2
26	3022994	SPACER-BUSHING	2
27	5415637	ISOLATOR	2
28	7518955	SCR-M8X1.25X75 8.8 HX/FL ZOD	1
29	7547332	NUT- M8X1.25, FLG, NYLOC-OLIVE D	1
30	1205320	ADAPTER-MANIFOLD,MOLDED	2
31	7519297	SCREW-HXFLG,M6X1.0X25,10.9	4

Copyright 1996-2026 Polaris Industries U.S.A All rights reserved.